品名: **PADGPS-J2J2G-102-16M** 工規

History List

版本 REV.	修訂者 EDITOR	修訂頁次 PAGE	修訂內容 ITEMS OF CHANGE	申請日期 DATE	生效日期 VALID DATE	ECN 編號 ECN NO
P0	許瑞麟	All	暫工發行	2019/11/28	依 PLM 發行	N/A

PADGPS-J2J2G-102-16M

Engineering Specification

1. Typical Electrical Properties

GPS L1:

Characteristics	Specification	Unit	Conditions
Center Frequency	1584±2	MHz	Note: (1)
Peak Gain	2.0 typ.	dBic	
Axial Ratio	<3	dB	
S_{11}	≦-10	dB	
Impedance	50	Ω	
Polarization	RHCP		
Frequency Temperature Coefficient	0±20	ppm/°C	-40°C ~ + 85°C

GPS L2:

Characteristics	Specification	Unit	Conditions
Center Frequency	1227±2	MHz	Note: (1)
Peak Gain	0.5 typ.	dBic	
Axial Ratio	<3	dB	
S_{11}	≦-10	dB	
Impedance	50	Ω	
Polarization	RHCP		
Frequency Temperature Coefficient	0±20	ppm/°C	-40°C ~ + 85°C

Note: (1) Patch antenna is located on 70x70mm ground plane.

PADGPS-J2J2G-102-16M, G: Green parts (RoHS compliance)

-102 are the code of project number, -16M show of appendix

THIS DRAWINGS AND SPECIFICATIONS ARE THE PROPERTY OF INPAQ TECHNOLOGY CO.,LTD.AND SHALL NOT BE REPRODUCED OR USED AS THE BASIS FOR THE MANUFACTURE OR SALE OF APPARATUS OR DEVICES WITHOUT PERMISSION

2. Dimension

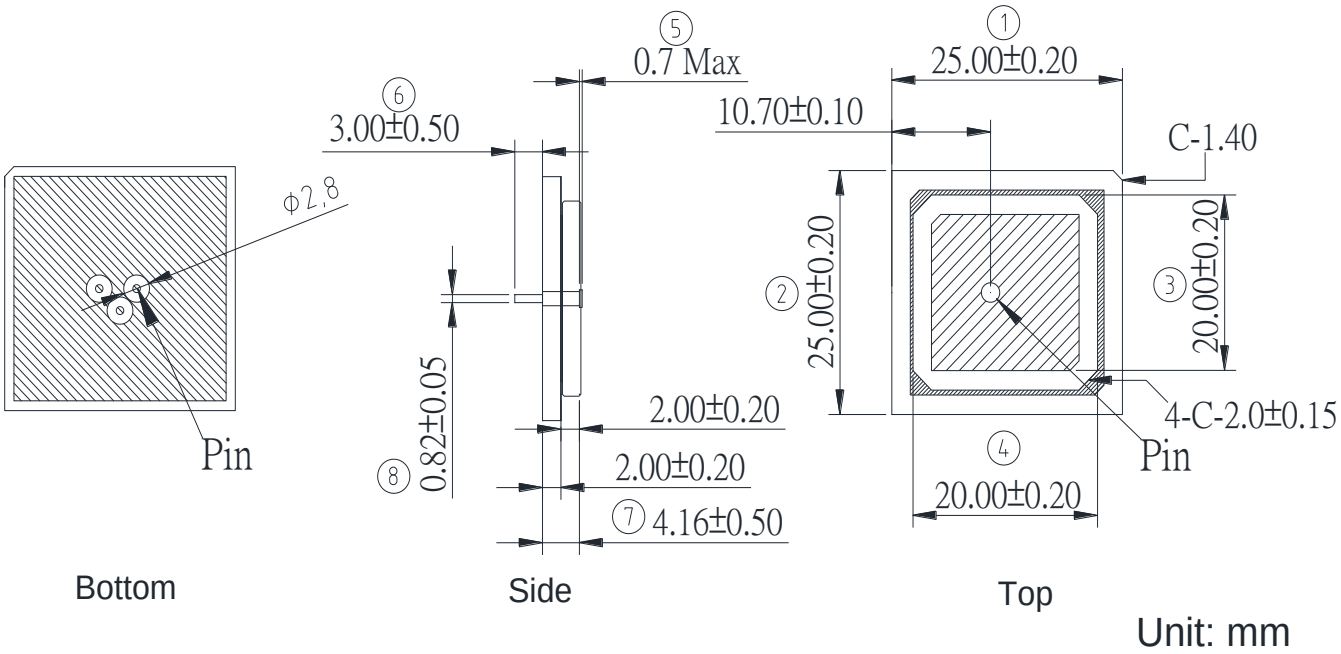

Note: These balloons are important dimension. The others are reference dimension.
For the electrical characteristics adjustment, silver electrode might be trimmed.
This will not affect antenna performance.

UNLESS OTHER SPECIFIED TOLERANCES ON: X= X.X= X.XX= ANGLES= HOLEDIA=		INPAQ TECHNOLOGY CO., LTD.
SCALE:	UNIT: mm	THIS DRAWINGS AND SPECIFICATIONS ARE THE PROPERTY OF INPAQ TECHNOLOGY CO.,LTD.AND SHALL NOT BE REPRODUCED OR USED AS THE BASIS FOR THE MANUFACTURE OR SALE OF APPARATUS OR DEVICES WITHOUT PERMISSION
DRAWN BY: 王瑞娟	CHECKED BY: 李守仁	
DESIGNED BY: 許瑞麟	APPROVED BY: 黃月碧	
TITLE: PADGPS-J2J2G-102-16M ENGINEERING SPECIFICATION	DOCUMENT NO.	ENS000131640 — SPEC REV. P0

3. Explanation of Appendix

PADGPS-J2J2G-102-16M

(1)(2)(3)

(1) "1" denotes 3 mm pin length

(2) Adhesive tape "6" denotes tape model

Adhesive transfer tape specification

2-1 Top layer:

2-1.1 Tape: Nitto 5000NS 17x17x0.16mm

2-1.2 Thickness: 0.16mm

2-1.3 Release liner: 0.1mm

2-1.4 Dimension: mm

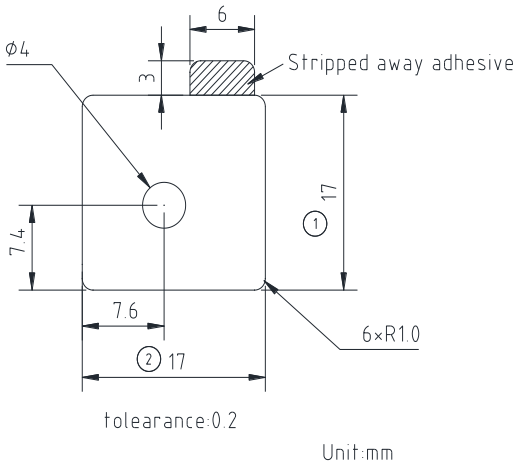

2-2 Bottom layer:

2-2.1 Tape: Nitto 5000NS 22x22x0.16mm

2-2.2 Thickness: 0.16mm

2-2.3 Release Liner: 0.1mm

2-2.4 Dimension: mm

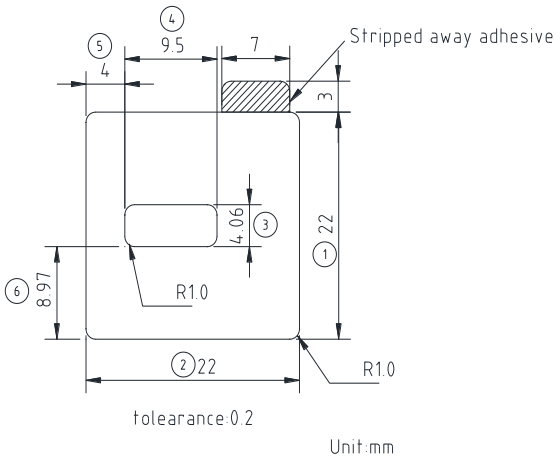

UNLESS OTHER SPECIFIED TOLERANCES ON: X= X.X= X.XX= ANGLES= HOLEDIA=		INPAQ TECHNOLOGY CO., LTD.
SCALE:	UNIT: mm	THIS DRAWINGS AND SPECIFICATIONS ARE THE PROPERTY OF INPAQ TECHNOLOGY CO.,LTD.AND SHALL NOT BE REPRODUCED OR USED AS THE BASIS FOR THE MANUFACTURE OR SALE OF APPARATUS OR DEVICES WITHOUT PERMISSION
DRAWN BY: 王瑞娟	CHECKED BY: 李守仁	
DESIGNED BY: 許瑞麟	APPROVED BY: 黃月碧	

TITLE: PADGPS-J2J2G-102-16M ENGINEERING SPECIFICATION	DOCUMENT NO.	ENS000131640	SPEC REV. P0

(3) Option appendix "M" denotes marking needed

Marking configuration

3.1 Logo for INPAQ logo

3.2 Type G for green product antenna

3.3 Three digits 102 are the code of our project number

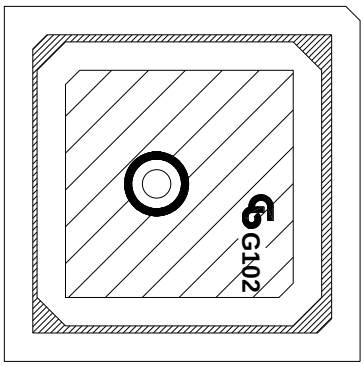

Patch top electrode

UNLESS OTHER SPECIFIED TOLERANCES ON: X= X.X= X.XX= ANGLES= HOLEDIA=		INPAQ TECHNOLOGY CO., LTD.
SCALE:	UNIT: mm	THIS DRAWINGS AND SPECIFICATIONS ARE THE PROPERTY OF INPAQ TECHNOLOGY CO.,LTD.AND SHALL NOT BE REPRODUCED OR USED AS THE BASIS FOR THE MANUFACTURE OR SALE OF APPARATUS OR DEVICES WITHOUT PERMISSION
DRAWN BY: 王瑞娟	CHECKED BY: 李守仁	
DESIGNED BY: 許瑞麟	APPROVED BY: 黃月碧	

TITLE: PADGPS-J2J2G-102-16M ENGINEERING SPECIFICATION	DOCUMENT NO.	ENS000131640	SPEC REV. P0