MATERIAL AND FINISHES:
BODY: BRASS, TRI-M3
COUPLING NUT:BRASS, NICKEL PLATING
CENTER CONTACT, PIN: BRASS,SILVER PLATING
SOCKET: PHOSPHOR BRONZE SILVER PLATING
INSULATOR: TEFLON
GASKET: SILICONE RUBBER

ASSEMBLY PROVIDES SURGE PROTECTION FROM BOTH DIRECTIONS

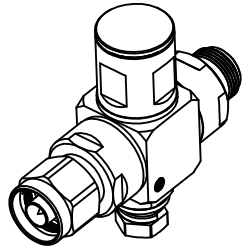

PERFORMANCE:
FREQUENCY RANGE: 800-2500 MHz
IMPEDANCE:50 Ohm
V.S.W.R: <1.2 FROM 800 TO 2500MHz
(TYPICAL <1.1 FROM 800 TO 960MHz
<1.12 FROM 1700 TO 2200MHz
<1.16 OVER REST OF BAND)
INSERTION LOSS:<0.1dB (TYPICAL<0.05)
PIM3:<-153 dBc,2x43dBm
IP CLASS: IP67
MAX.DISCHARGE CURRENT:
20KA@8/20μS WAVE
RESIDUAL VOLTAGE:
<15V@1KV/μS

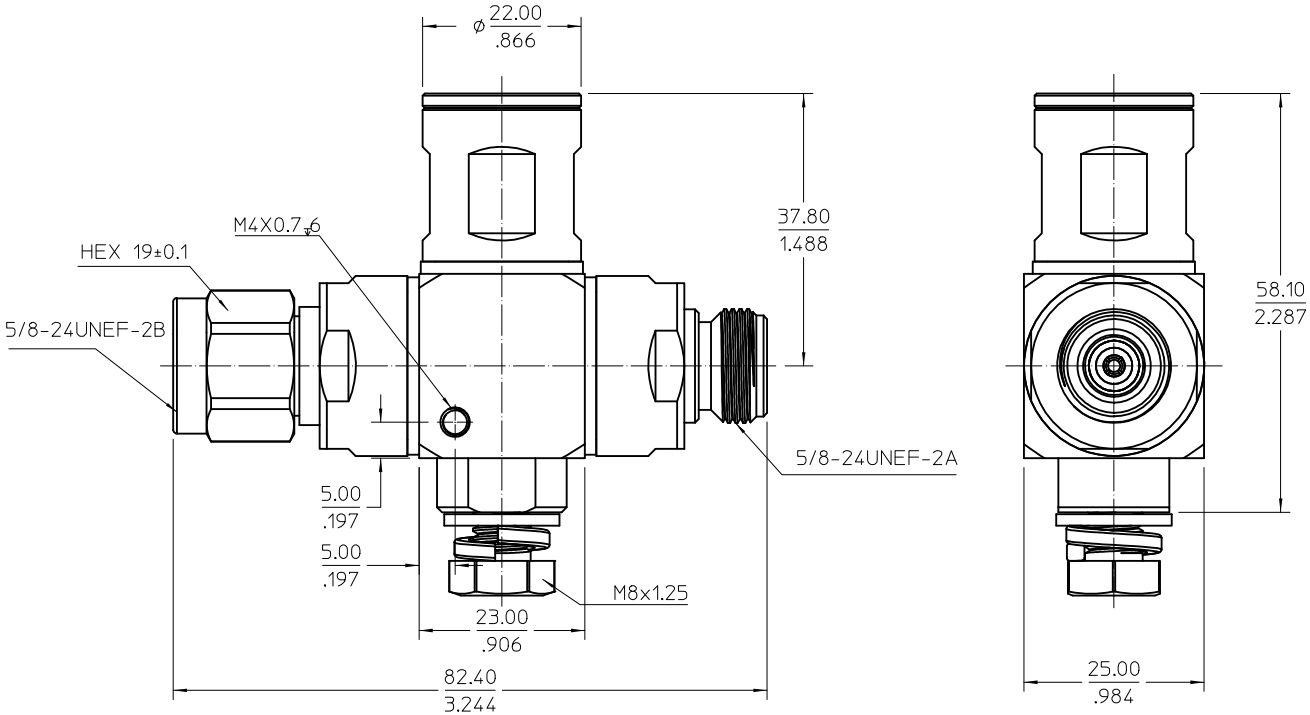

PART # 73136-0400
OLD TEAN NO.:TA2.908.063B

IEC61643-21	LIGHTNING PROTECTION
IEC60169-16	INTERFACE
SPECIFICATION	DESCRIPTION

PRE-RELEASE REFERENCE USE ONLY

CHG:NEW RELEASE
PER PDR NO: 201006046
EC NO: 2010/07/05
DRWN:CZHU03
CH'KD:
APPR:
DESCRIPTION
1
REV

QUALITY SYMBOLS
▼=0
Ⓒ=0

GENERAL TOLERANCES (UNLESS SPECIFIED)

	mm	INCH
4 PLACES	± ---	± ---
3 PLACES	± ---	± ---
2 PLACES	± ---	± ---
1 PLACE	± ---	± ---
ANGULAR ± 2 °		

DRAFT WHERE APPLICABLE MUST REMAIN WITHIN DIMENSIONS

DIMENSION STYLE: MM/IN
SCALE
DESIGN UNITS: METRIC
THIRD ANGLE PROJECTION
DRAWN BY: CZHU03 DATE: 2010/07/05
CHECKED BY DATE
APPROVED BY DATE
MATERIAL NO. 731360400
TITLE: ARRESTER NMF,800-2500MHZ, IP67
molex MOLEX INCORPORATED
DOCUMENT NO. SD-73136-040
SHEET NO. 1 OF 1
SIZE C

THIS DRAWING CONTAINS INFORMATION THAT IS PROPRIETARY TO MOLEX INCORPORATED AND SHOULD NOT BE USED WITHOUT WRITTEN PERMISSION