BOLYMIN

BG24064A

Feature

1. SMT PCB with metal frame
2. Built in controller T6963C
3. +5V power supply
4. 1/64 duty
5. LED B/L pins: A / K
6. Option: temperature compensation
7. Option: LED, EL B/L, CCFL
8. Option: negative voltage(built-in, external)
9. Option: Touch Panel

Mechanical Data

Item	Standard Value	Unit
Module Dimension	180.0 x 65.0	mm
Viewing Area	133.0 x 39.0	mm
Dot Size	0.49 x 0.49	mm
Dot Pitch	0.53 x 0.53	mm

Pin Assignment

Pin	Symbol	Function
1	FG	Frame ground
2	Vss	Power supply (GND)
3	Vdd	Power supply (+5V)
4	Vo	Contrast Adjustment
5	/WR	Data write
6	/RD	Data read
7	/CE	Chip enable
8	C/D	Command/data read/write
9	Vee	Negative Voltage output (-13.6V)
10	/RST	Reset signal
11~18	DB0~7	Data bus line
19	FS	Font select(H:6x8 L:8x8)
20	NC	No connection

Electronic Characteristics

Item	Symbol	Condition	Typical Value	Unit
Input Voltage	Vdd	Vdd = +5V	5.0	V
Supply Current	Idd	Vdd = +5V	40	mA
LCD Driving Voltage	Vdd-Vo	25°C	12.5	V
LED Forward Voltage	Vf	25°C	4.2	V
LED Forward Current	If	25°C	450	mA
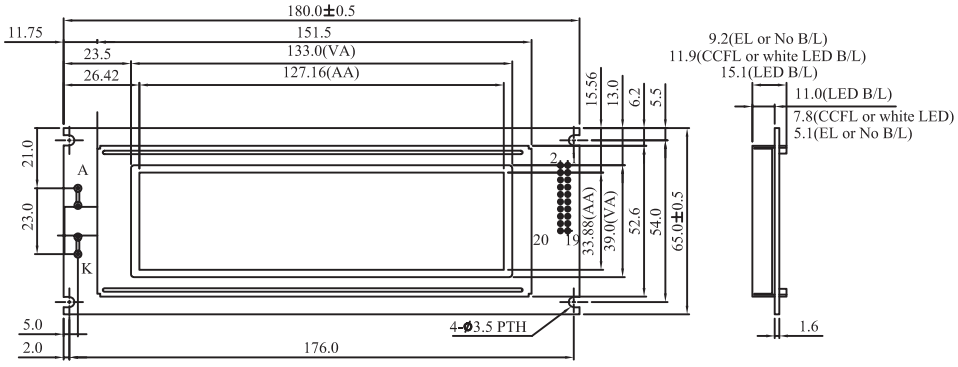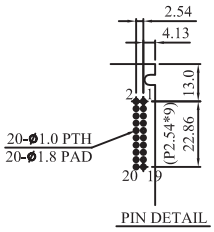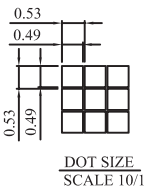
Dimension