Drawing Number – W60

Outline Number – 101A336

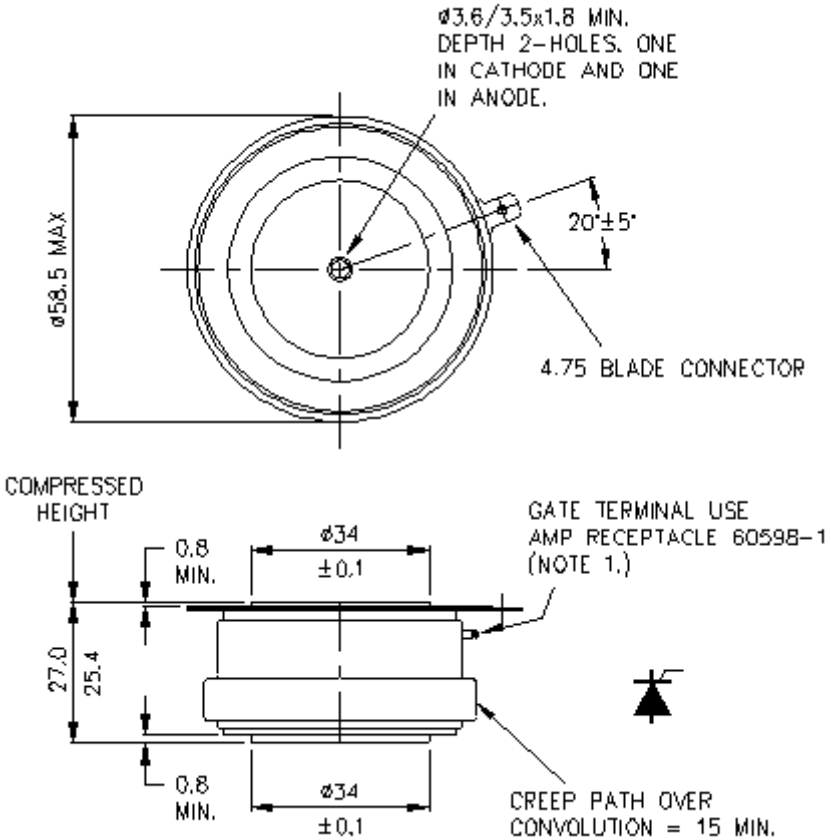

Weight 340g

Westcode Customer Services email: wsl.sales@westcode.com **Telephone: +44 (0)1249 444524 Fax: +44 (0)1249 659448**