BOLYMIN

BG12232B

Feature

1. COB with metal frame
2. No built-in oscillation, requiring external clock
3. Built-in controller SED1520Daa
4. 1/32 duty cycle
5. +3V~ +5V single power supply
5. requiring negative voltage for LCD driving
6. Option: FFC cable
7. Option: LED edge B/L, EL B/L

Mechanical Data

Item	Standard Value	Unit
Module Dimension	65.8 x 27.1	mm
Viewing Area	60.5 x 18.5	mm
Dot Size	0.4 x 0.45	mm
Dot Pitch	0.44 x 0.49	mm

Pin Assignment

Pin	Symbol	Function
1	Ao	H: Data L: Instruction
2	CS2	L: Enable chip2
3	CS1	L: Enable chip1
4	CL	External clock input 2Khz
5	RD/ E	RD for 80 series, E for 68 series
6	WR(R/W)	WR for 80 serial, R/W for 68 serial
7	Vss	Power supply GND
8~15	DB0 ~ 7	Data bus line
16	Vdd	Power supply(+3V~+5V)
17	RES	H: 68 series, L: 80 series
18	Vo	Contrast Adjustment

Electronic Characteristics

Item	Symbol	Condition	Typical Value	Unit
Input Voltage	Vdd	Vdd = +5V	5.0	V
Supply Current	Idd	Vdd = +5V	0.5	mA
LCD Driving Voltage	Vdd-Vo	25°C	6.4	V
LED Forward Voltage	Vf	25°C	2.1	V
LED Forward Current	If	25°C	40	mA
EL Power Voltage	Vel	Vel=110Vac/400Hz		V
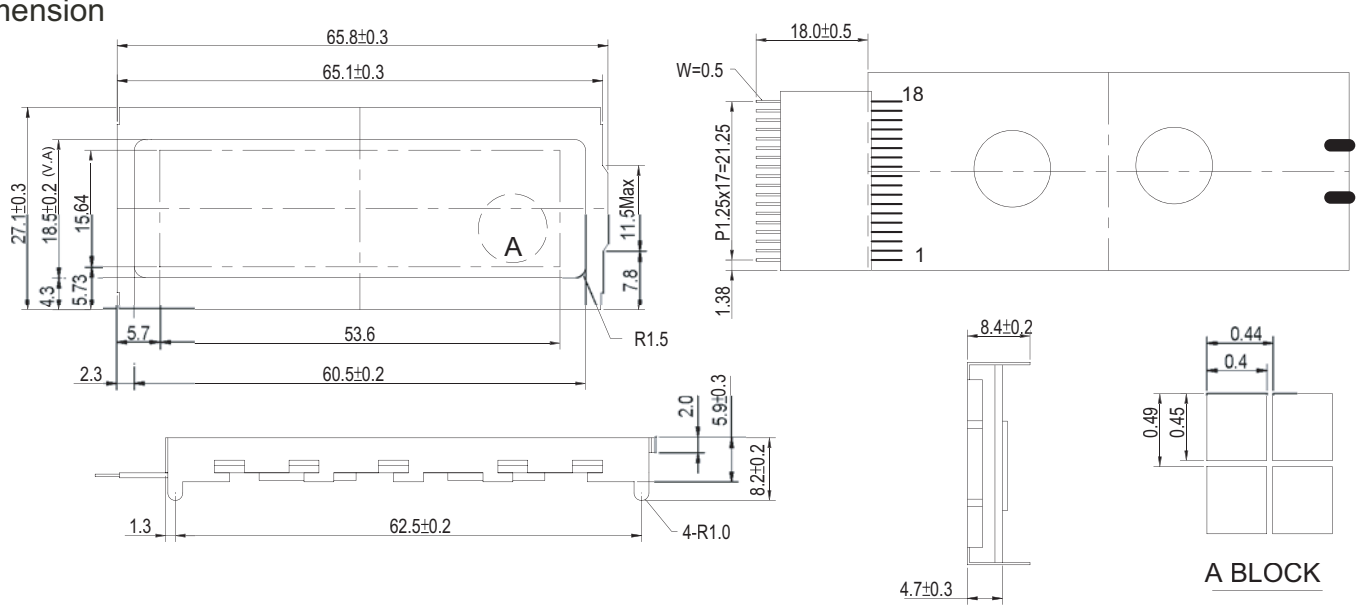
Dimension