BOLYMIN

BG24064B

Feature

1. SMT PCB with metal frame
2. Built in controller LC7981(=HD61830)
3. +5V single power supply
4. 1/64 duty cycle
5. Option: negative voltage
6. Option: LED, EL B/L, CCFL

Mechanical Data

Item	Standard Value	Unit
Module Dimension	180.0 x 65.0	mm
Viewing Area	133.0 x 39.0	mm
Dot Size	0.49 x 0.49	mm
Dot Pitch	0.53 x 0.53	mm

Pin Assignment

Pin	Symbol	Function
1	Vss	Power supply (GND)
2	Vdd	Power supply (+5V)
3	Vo	Contrast Adjustment
4	RS	Data/instruction select
5	/R/W	Data read/write
6	E	Enable signal
7~14	DB0~7	Data bus line
15	/CS	Chip select
16	/RST	Reset signal
17	Vee	Negative Voltage output (-15V)
18	A	LED B/L V+
19	K	LED B/L V-
20	FGND	Frame GND

Electronic Characteristics

Item	Symbol	Condition	Typical Value	Unit
Input Voltage	Vdd	Vdd = +5V	5.0	V
Supply Current	Idd	Vdd = +5V	40	mA
LCD Driving Voltage	Vdd-Vo	25°C	12.5	V
LED Forward Voltage	Vf	25°C	4.2	V
LED Forward Current	If	25°C	450	mA
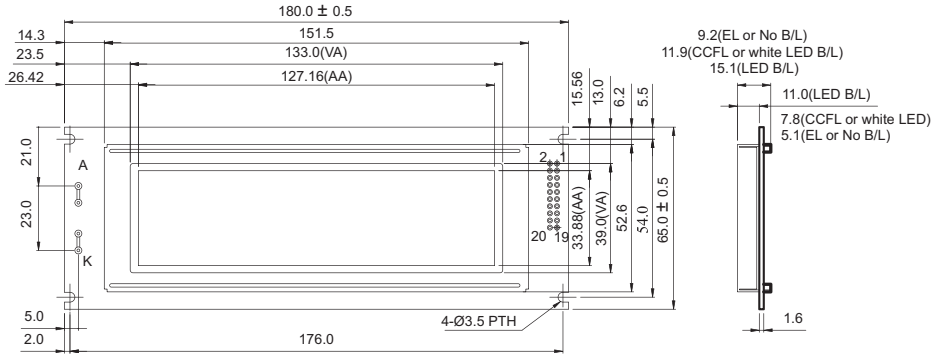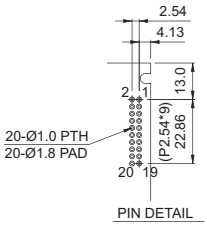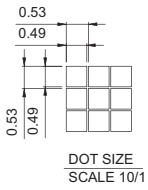
Dimension