BOLYMIN

BG240128E

Feature

1. SMT PCB with metal frame
2. No built-in controller
3. 1/128 duty cycle
4. +5V power supply
5. Option: negative voltage
6. Option: temperature compensation
7. Option: LED array, EL B/L, CCFL

Mechanical Data

Item	Standard Value	Unit
Module Dimension	144.0 x 104.0	mm
Viewing Area	114.0 x 64.0	mm
Dot Size	0.43 x 0.43	mm
Dot Pitch	0.45 x 0.45	mm

Pin Assignment

Pin	Symbol	Function
1	FLM	First Line Marker
2	CP	Data Shift Clock
3	LP	Data Latch Clock
4	M	AC signal for LCD driver output
5	Vdd	Power supply (+5V)
6	Vss	Power supply (GND)
7	NV(Vee)	Negative voltage output -17.6V
8~11	DB0~DB3	Data bus line
12	Vo	Contrast adjustment
13	/DispOff	H: Display ON L: Display OFF
14	A	Backlight power supply(+)
15	K	Backlight power supply(GND)

Electronic Characteristics

Item	Symbol	Condition	Typical Value	Unit
Input Voltage	Vdd	Vdd = +5V	5.0	V
Supply Current	Idd	Vdd = +5V	45	mA
LCD Driving Voltage	Vdd-Vo	25°C	18.5	V
LED Forward Voltage	Vf	25°C	4.2	V
LED Forward Current	If	25°C	900	mA

Dimension

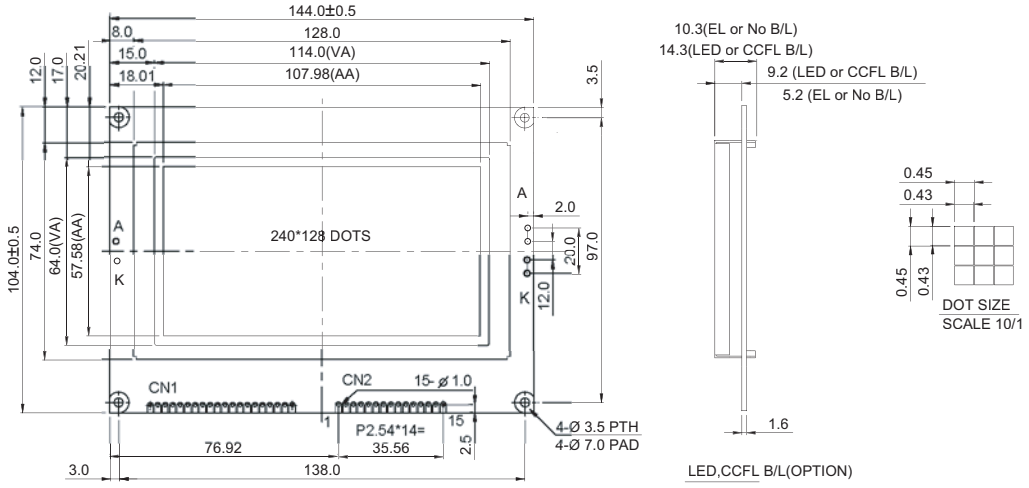

CN1 NO CONNECTION